WARN INDUSTRIAL HOIST	WINCH MODEL	PART NUMBER	TYPE
	DC3000	PN 36947	**24V ELECTRIC**

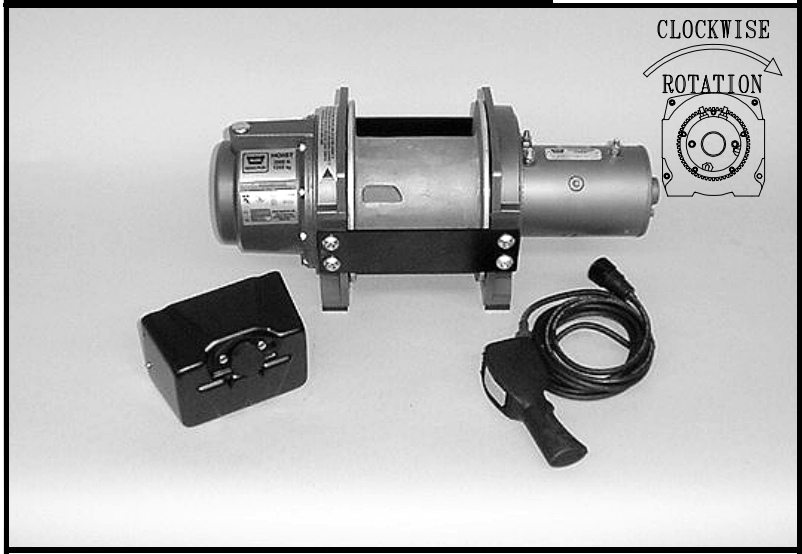

05/21/02

The DC 3000 features a special 199:1 3-stage planetary gear reduction. The weather-proof inductrial contactor with 12' remote provides dynamic braking for secure load control. The cable to drum ratio is 18:1 with 5/16" wire rope. Designed to meet ANSI B30.5 standard

ENGINEERING DATA:

- **Maximum rated load :** 3000 lbs (1364kg)
- **Maximum wire rope recommended:** 5/16" 9800 lbs (4455kg) minimum breaking strength
- **Drum barrel diameter:** 5.31" (135 mm)
- **Drum flange diameter:** 8.90" (226 mm)
- **Distance between flanges:** 5.94" (151 mm)
- **Contactor:** Industrial contactor with 12' (3.7 M) heavy duty remote control
- **Approximate shipping weight:** 83 lbs (38 kg)
- **Gear ratio:** 199:1
- **Motor:** 24 volt DC series wound 2.5 hp (1.87KW)

STANDARDS COMPLIANCE:

- ANSI B30.5

PERFORMANCE DATA:

LAYER	LINE LOAD		LINE SPEED		5/16" WIRE ROPE CAPACITY	
	lb.	kg	ft/min.	m/min.	ft.	meters
1	3000	1364	15	4.5	25	7.6
2	2700	1227	16	5.0	54	16.5
3	2455	1116	18	5.5	85	25.9
4	2250	1023	20	6.0	119	36.3
1 st LAYER	LINE LOAD		LINE SPEED			DUTY CYCLE
	lb.	kg	ft/min.	m/min.	amps	min/10 min
	0	0	35	10.7	50	3.6
	1000	455	22	6.7	90	3.1
	2000	909	17	5.2	115	2.6
	3000	1364	15	4.6	145	2.3

AVAILABLE ACCESSORIES:

- OverLoad Interrupt pn 61930

WARN INDUSTRIES, INC. INDUSTRIAL PRODUCTS

12900 S.E. Capps Road, Clackamas, OR USA 97015-8903
Customer Service (in North America): 1.800.543.9276
Customer Service (international): 1.503.722.3008
Fax:1.503.722.3000 www.warn.com

WARN INDUSTRIAL HOIST	WINCH MODEL	PART NUMBER	TYPE
	DC 3000	PN 36947	**24V ELECTRIC**

DIMENSIONAL DATA

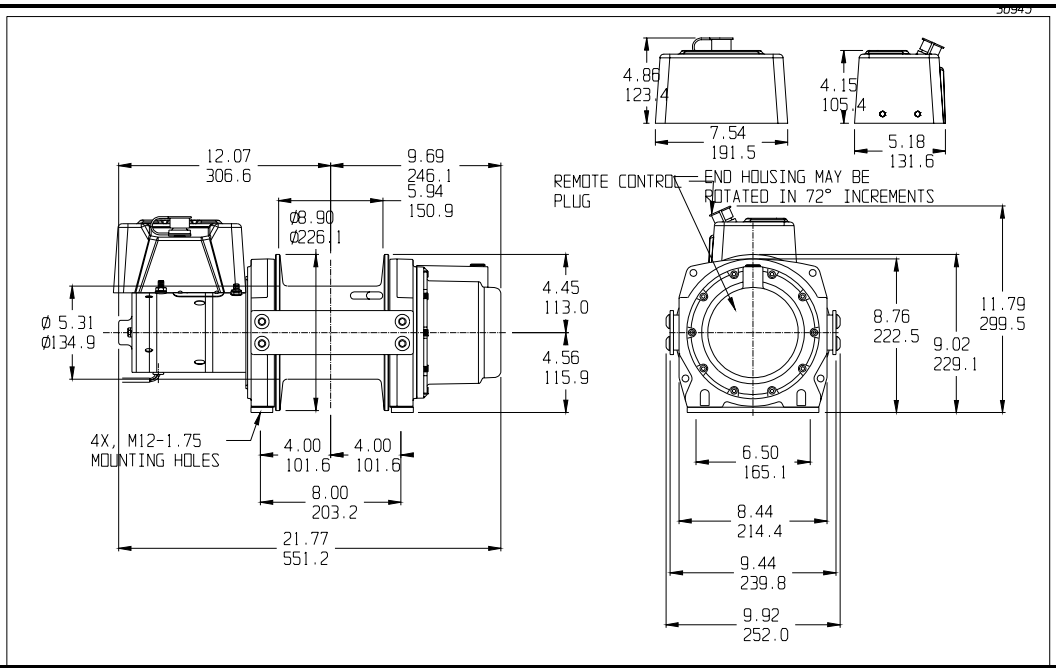

REPLACEMENT PARTS

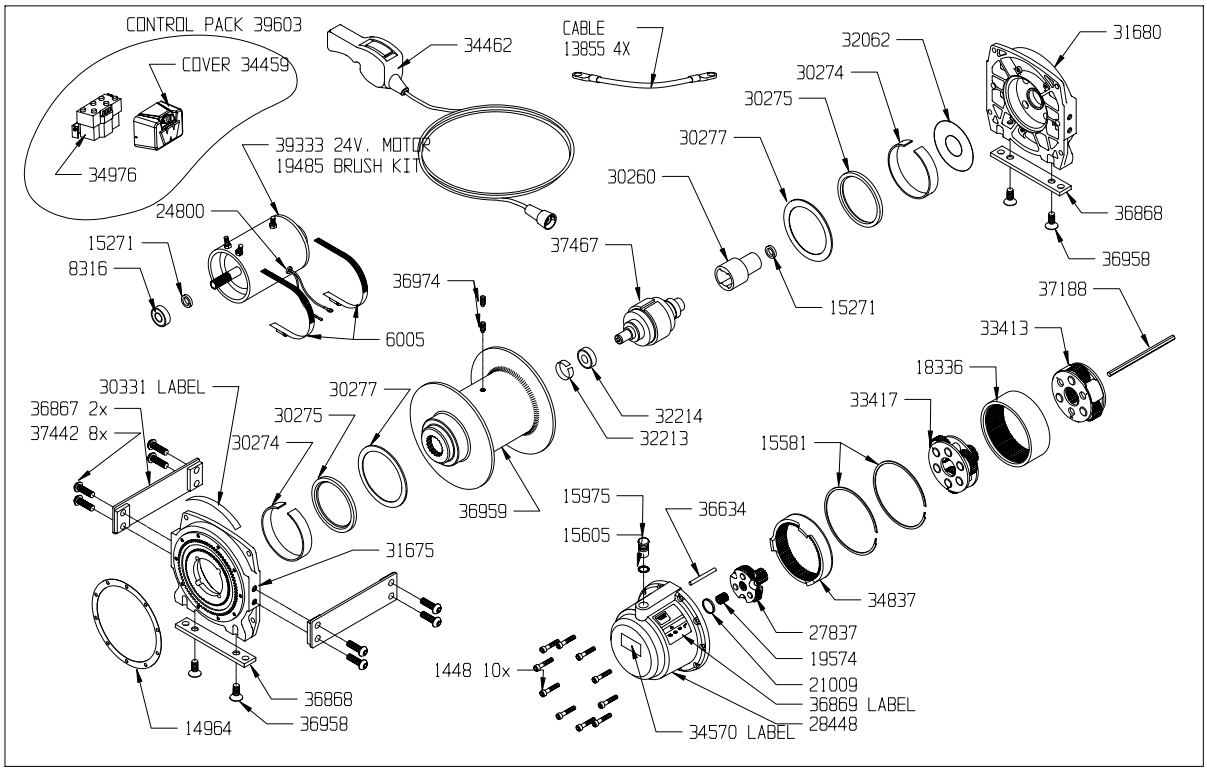

WARN INDUSTRIES, INC. INDUSTRIAL PRODUCTS

12900 S.E. Capps Road, Clackamas, OR USA 97015-8903
Customer Service (in North America): 1.800.543.9276
Customer Service (international): 1.503.722.3008
Fax:1.503.722.3000 www.warn.com